SAM9X60 SiP

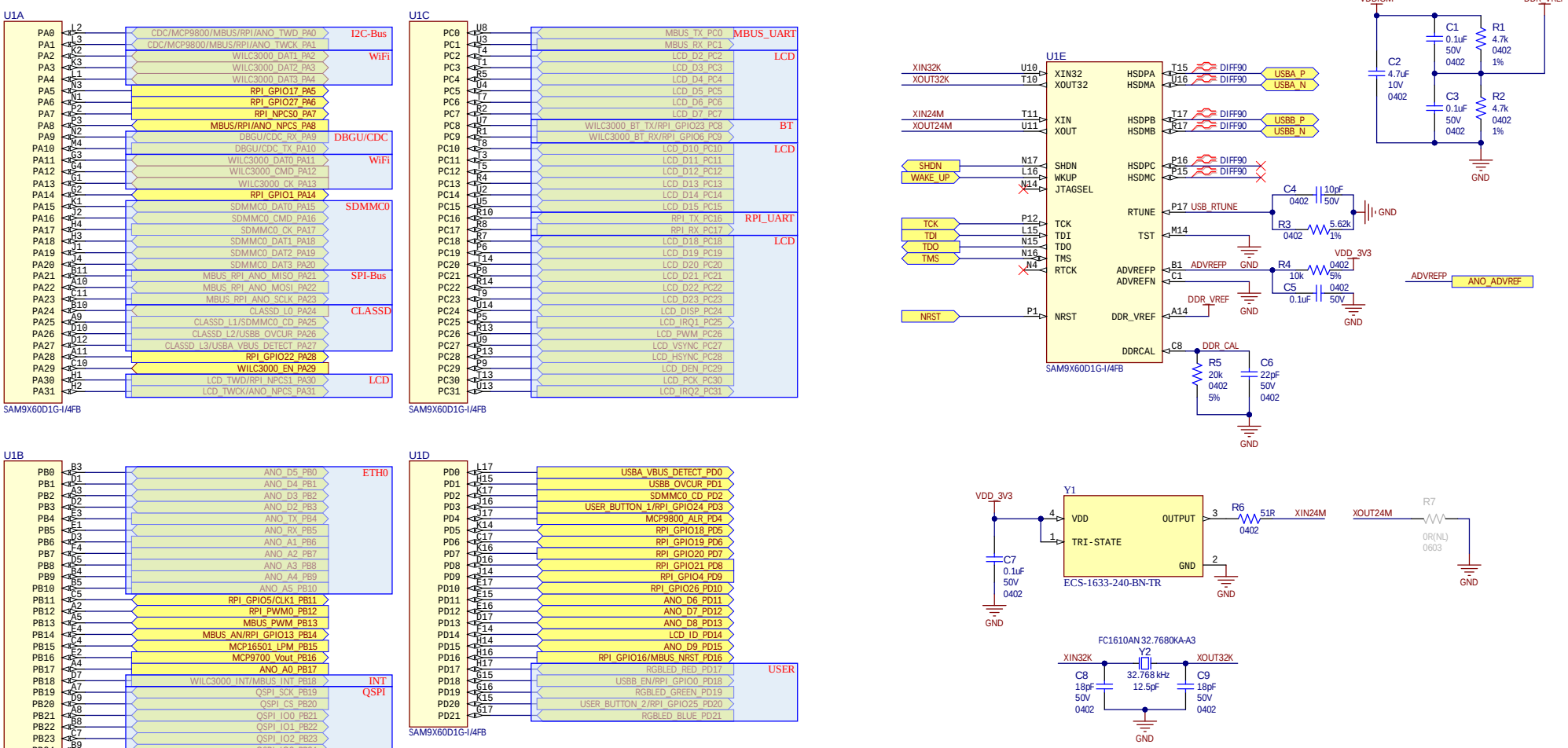

Drawn By: MS	MICROCHIP
Engineer: DD	
PartNumber: Demo	Project Title: SAM9X60-Hobby-Kit
Sheet Title: SAM9X60 SiP	Variant Name: Standard
Size: B	SCH #: 03-00170 Rev: 4 / PCB #: 04-11285 Rev: 4
Date: 2022/9/8 下午 01:58	Sheet 1 of 11
File: 01 - SAM9X60-SiP.SchDoc	Designed with Altium — Altium.com

SAM9X60 SiP Power

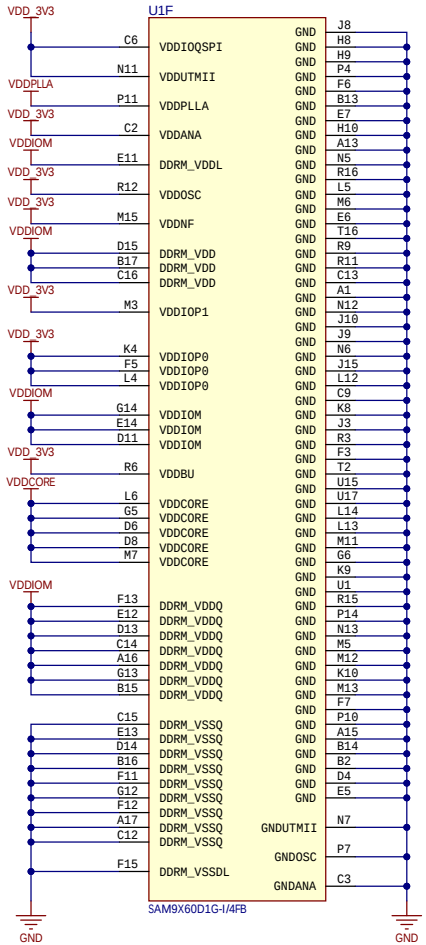

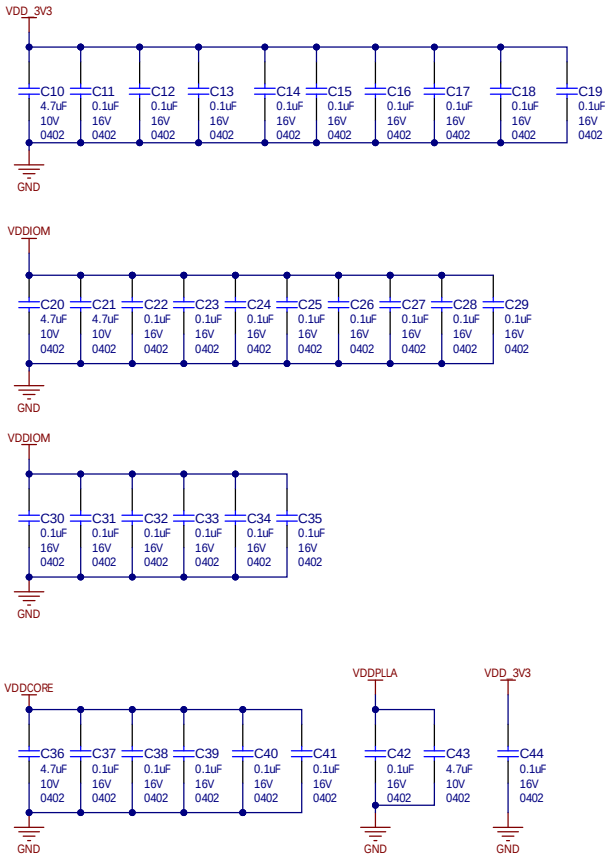

Drawn By: MS			MICROCHIP
Engineer: DD			
PartNumber: Demo		Project Title: *SAM9X60-Hobby-Kit*	
Sheet Title: SAM9X60 SiP Power Rails		Variant Name: Standard	Designed with Altium
Size B	SCH #: 03-00170 Rev: 4	Date: 2022/9/8 下午 01:58	Altium.com
	PCB #: 04-11285 Rev: 4	Sheet 2 of 11	
File: 02 - MPU power.SchDoc			

Power supplies

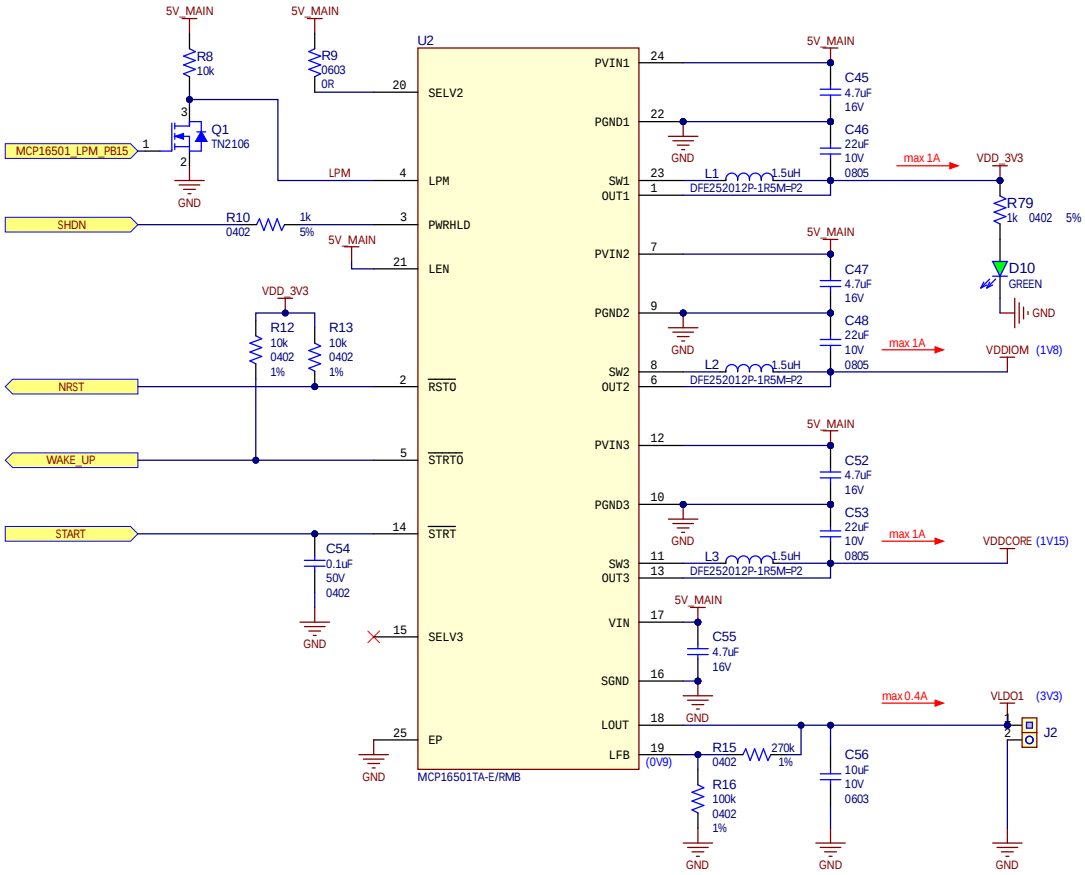

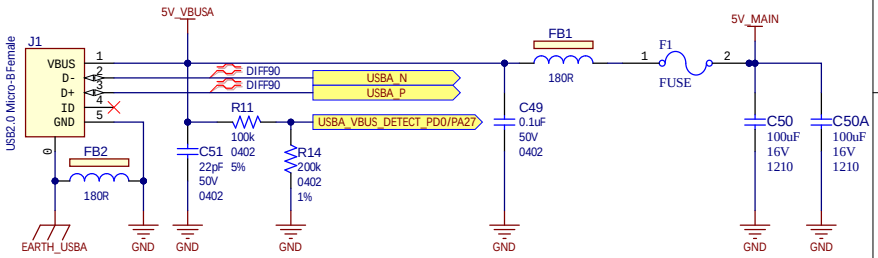

Drawn By: MS	MICROCHIP
Engineer: DD	
PartNumber: Demo	Project Title: SAM9X60-Hobby-Kit
Sheet Title: MCP16501	Variant Name: Standard
Size: B	SCH #: 03-00170 Rev: 4
	PCB #: 04-11285 Rev: 4
	Date: 2022/9/8 下午 01:58
	Sheet 3 of 11
File: 03 - Power Supplies.SchDoc	Designed with Altium — Altium.com

Debug Interface

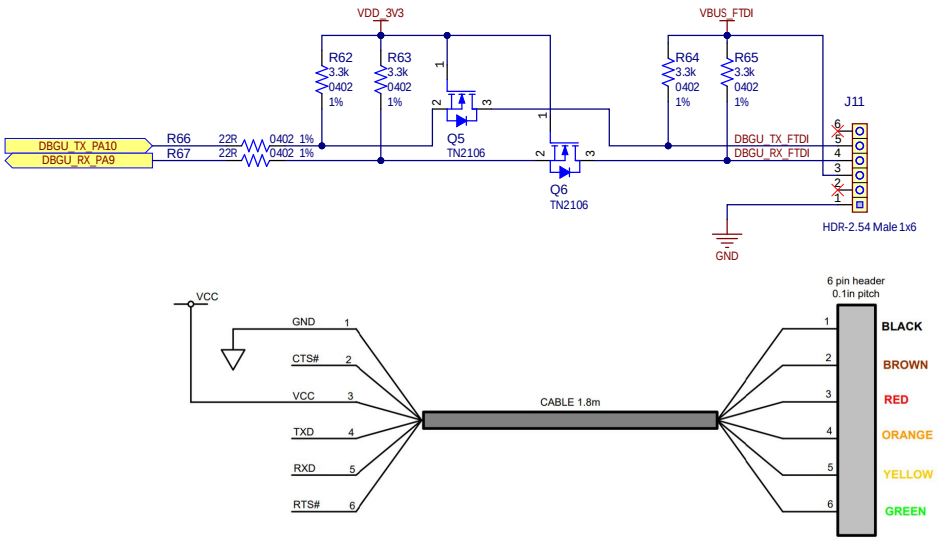

JTAG with SAM-ICE

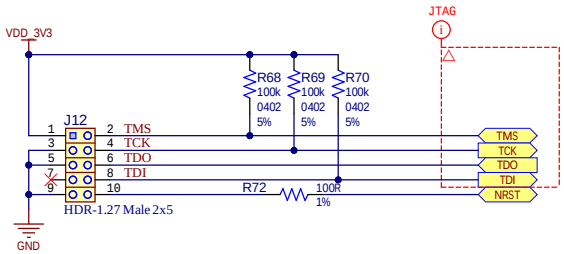

Drawn By: MS			MICROCHIP
Engineer: DD			
PartNumber: Demo		Project Title: *SAM9X60-Hobby-Kit*	
Sheet Title: Debug Interface		Variant Name: Standard	Designed with Altium
Size B	SCH #: 03-00170 Rev: 4	Date: 2022/9/8 下午 01:58	Altium.com
	PCB #: 04-11285 Rev: 4	Sheet 9 of 11	
File: 07 - Debug interface.SchDoc			

LCD RGB666 Interface

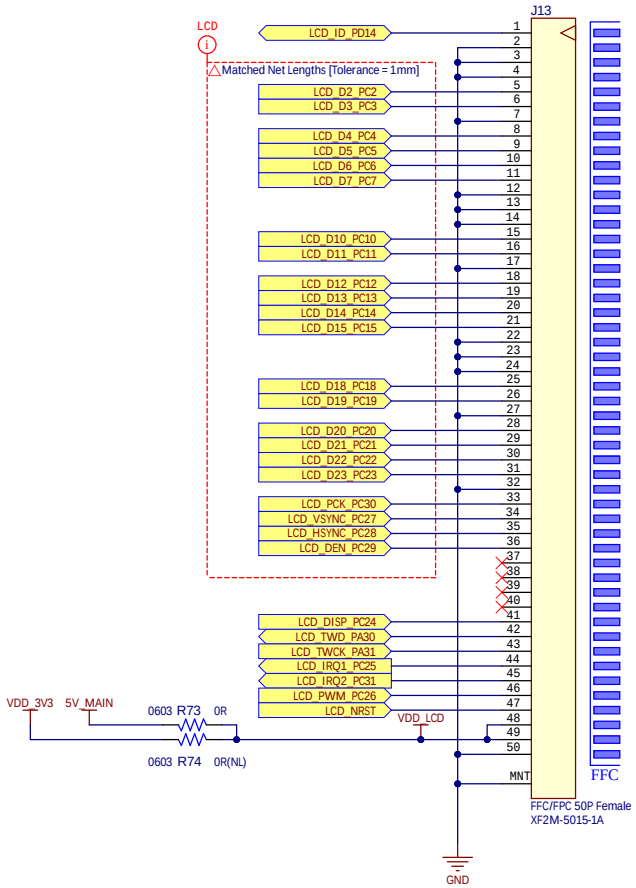

Drawn By: MS			MICROCHIP
Engineer: DD			
PartNumber: Demo		Project Title: *SAM9X60-Hobby-Kit*	
Sheet Title: LCD RGB666 Interface		Variant Name: Standard	Designed with Altium
Size B	SCH #: 03-00170	Rev: 4	Date: 2022/9/8 下午 01:58
	PCB #: 04-11285	Rev: 4	Sheet 10 of 11
File: 08 - LCD interface.SchDoc			Altium.com

QSPI

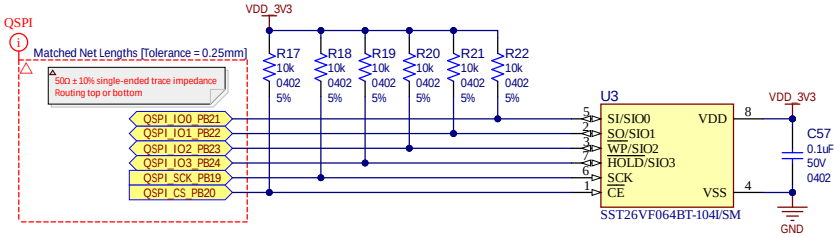

µSD-CARD socket

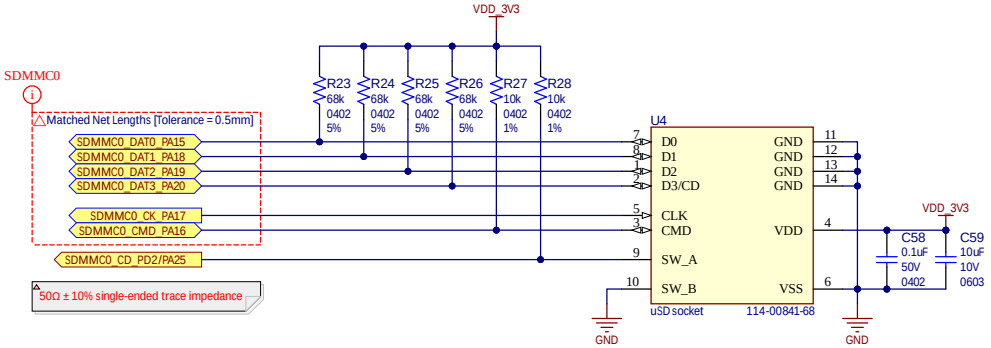

Project Owner: DD				
PCB Layout Contact: MS				
PartNumber: Demo	Project Title: SAM9X60-Hobby-Kit		Variant: Standard	
Sheet Title: **				
Size B	SCH #: 03-00170	Rev: 4	Date: 2022/9/8	
	PCB #: 04-11285	Rev: 4	Sheet * of *	
File: 04 - Memories.SchDoc				

MICROCHIP

Designed with Altium
Altium.com

RGB Leds

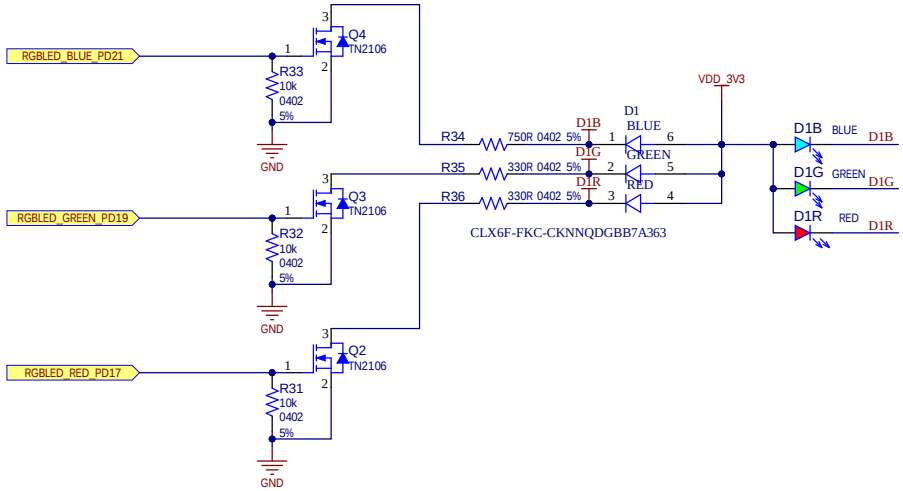

mikroBUS

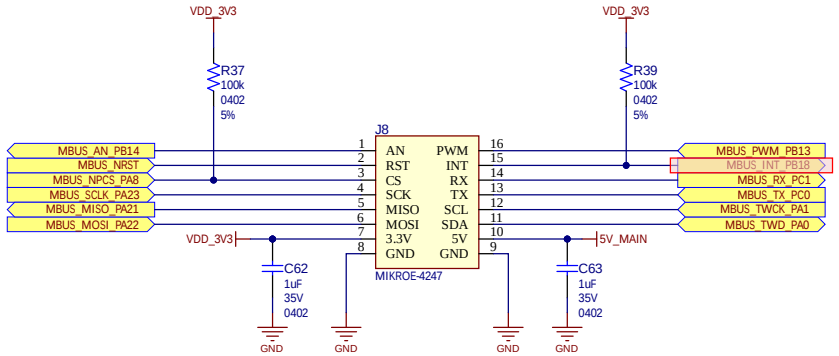

User Buttons

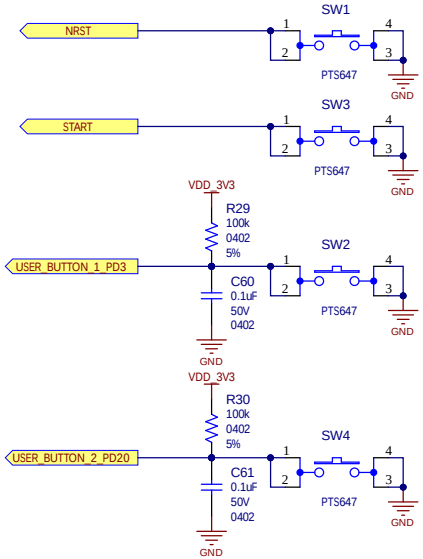

Raspberry Pi

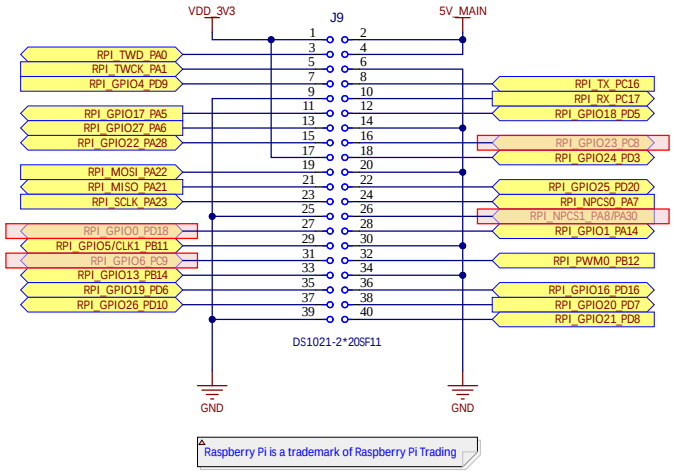

Raspberry Pi is a trademark of Raspberry Pi Trading

Arduino

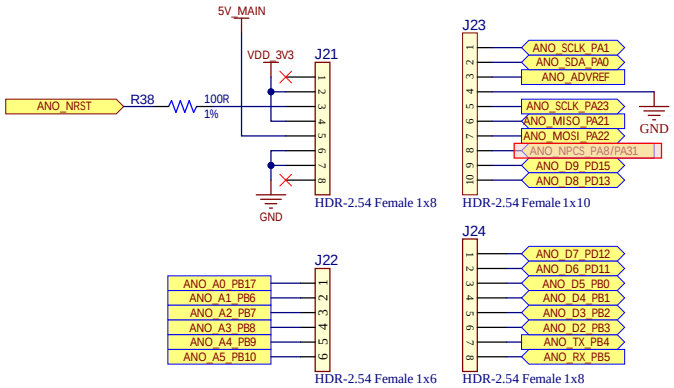

USB host interface

USB-B port

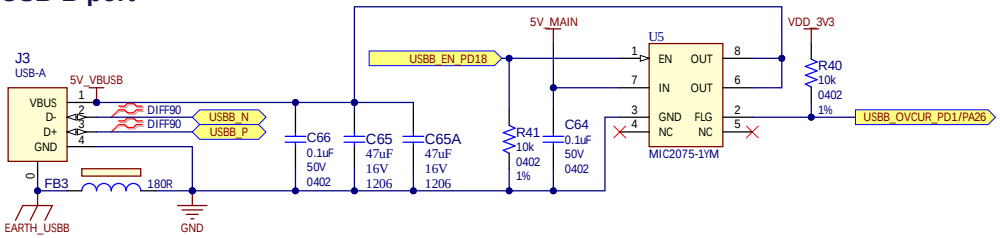

USB-C port & MCP2221

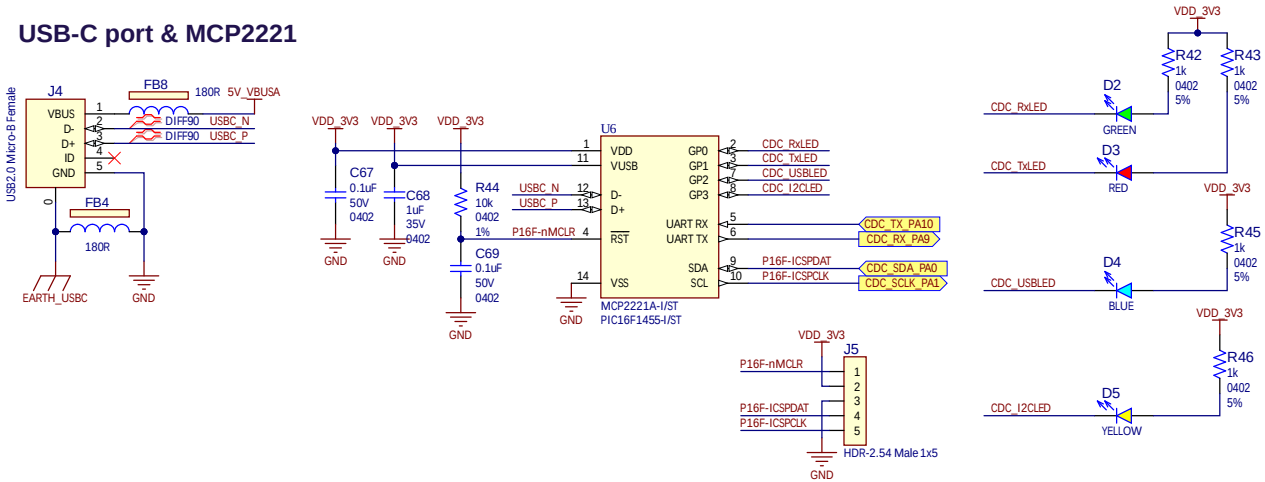

Project Owner: DD			
PCB Layout Contact: MS			
PartNumber: Demo	Project Title: SAM9X60-Hobby-Kit	Variant: Standard	
Sheet Title: **			
Size B	SCH #: 03-00170	Rev: 4	Date: 2022/9/8
	PCB #: 04-11285	Rev: 4	Sheet * of *
File: 06 - USB Host Interfaces.SchDoc			

MICROCHIP

Designed with Altium
Altium.com

CLASS D

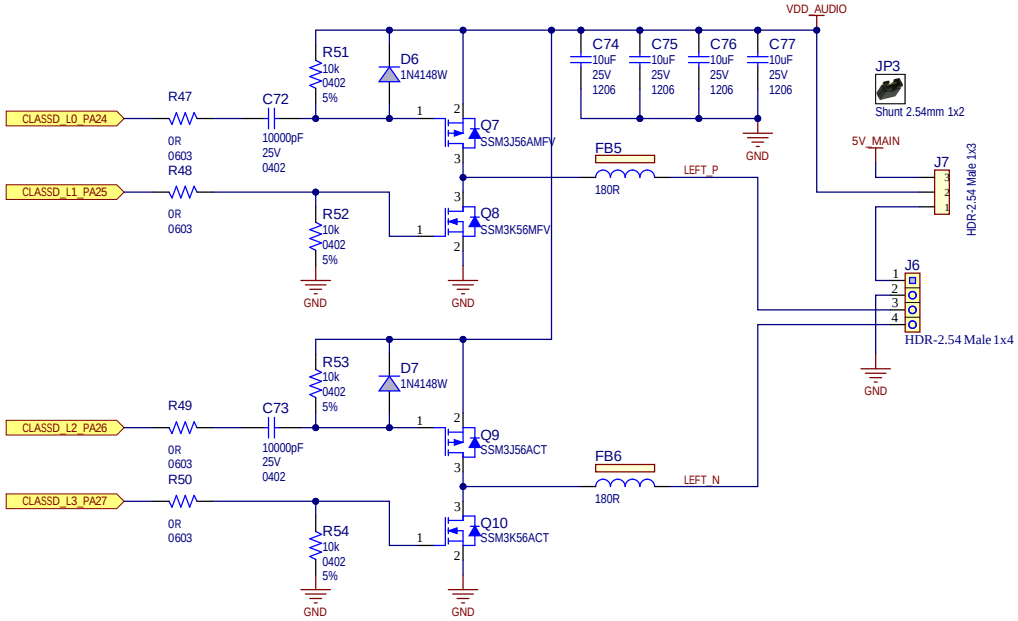

MCP9700

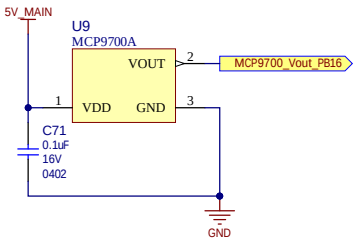

MCP9800

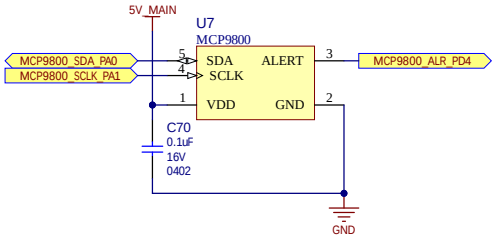

TEST PIN

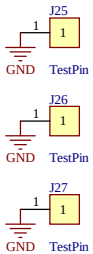

Project Owner: DD			
PCB Layout Contact: MS			
PartNumber: Demo	Project Title: SAM9X60-Hobby-Kit	Variant: Standard	
Sheet Title: **			
Size B	SCH #: 03-00170	Rev: 4	Date: 2022/9/8
	PCB #: 04-11285	Rev: 4	Sheet * of *
File: 09 - Others.SchDoc			

MICROCHIP

Designed with Altium
Altium.com

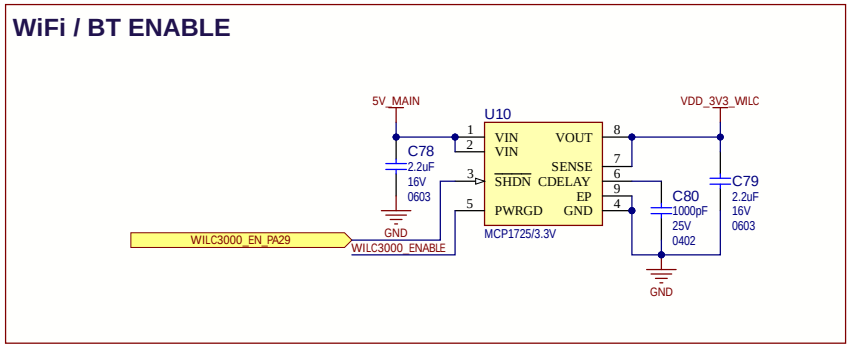

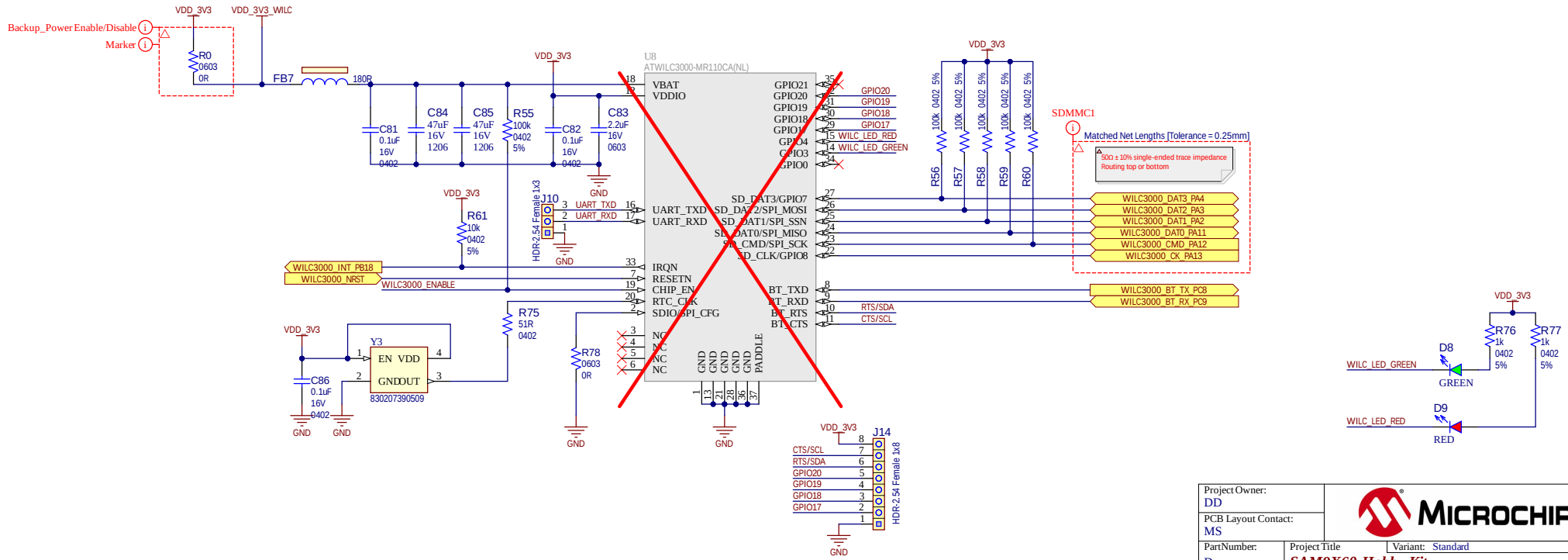

Project Owner: DD			
PCB Layout Contact: MS			
PartNumber: Demo	Project Title: SAM9X60-Hobby-Kit	Variant: Standard	
Sheet Title: **			
Size: B	SCH #: 03-00170	Rev: 4	Date: 2022/9/8
	PCB #: 04-11285	Rev: 4	Sheet * of *
File: 10 - WiFi BT Module.SchDoc			

MICROCHIP

Designed with Altium
Altium.com

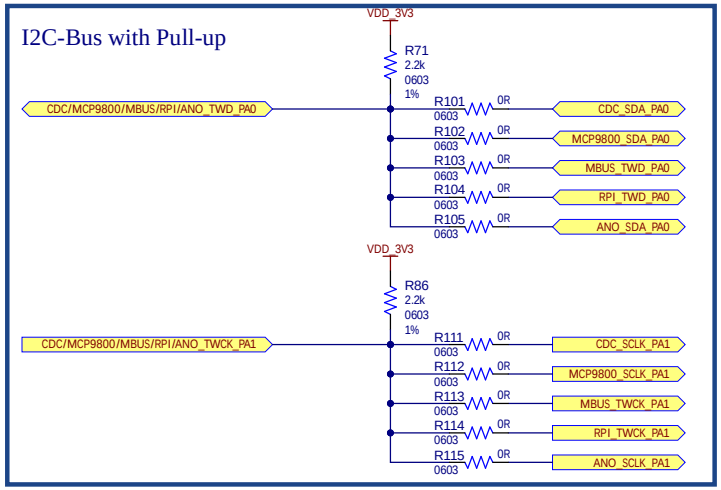

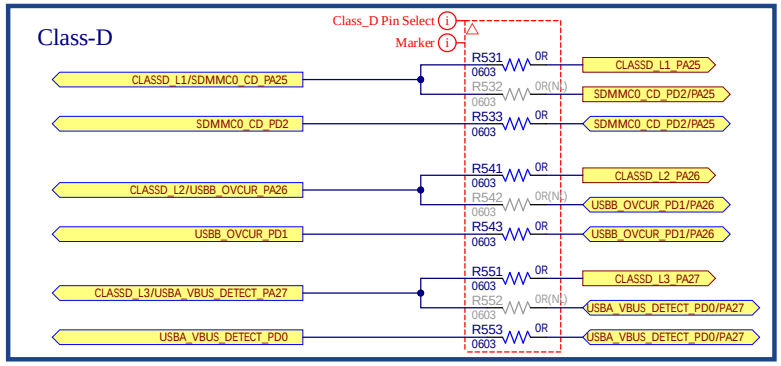

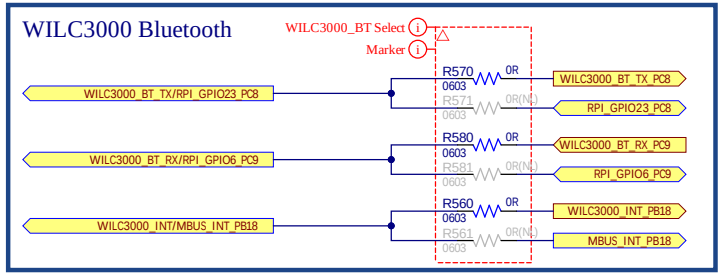

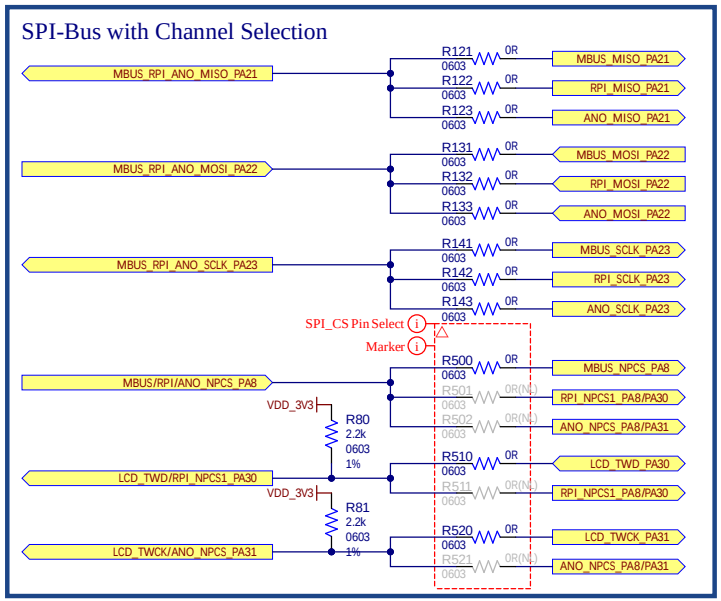

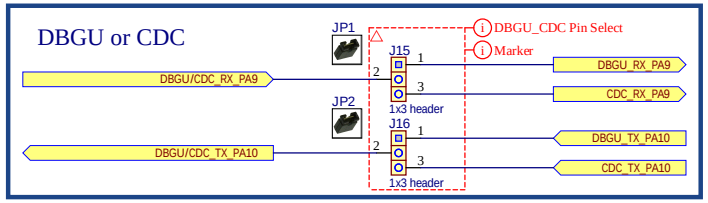

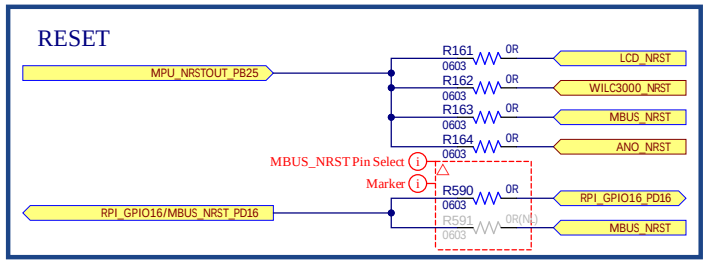

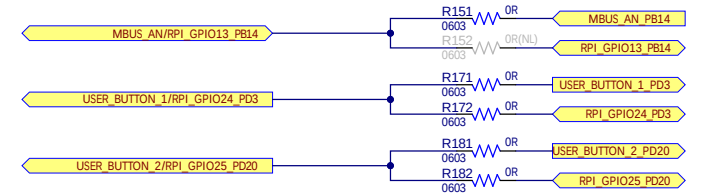

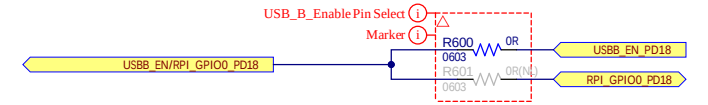

Project Owner: DD	MICROCHIP		
PCB Layout Contact: MS			
PartNumber: Demo	Project Title: SAM9X60-Hobby-Kit	Variant: Standard	
Sheet Title: **			Designed with Altium Altium.com
Size B	SCH #: 03-00170	Rev: 4	Date: 2022/9/8
	PCB #: 04-11285	Rev: 4	Sheet * of *
File: 11 - PIO muxing.SchDoc			